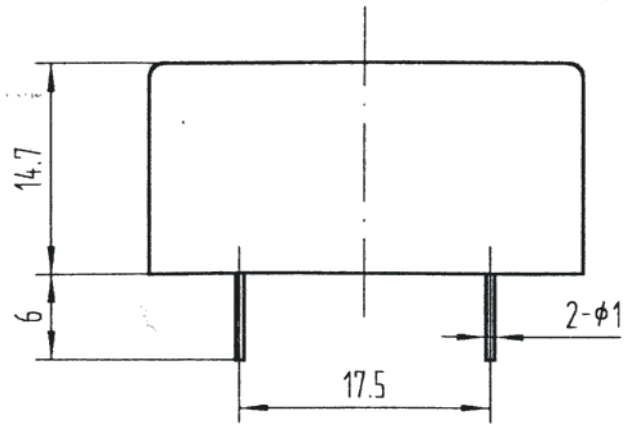

Parameter	Value	Units
Operating Voltage	3 - 18	VDC
Rated Voltage	12	VDC
Rated Current	7.0 Max.	mA
Sound Pressure Level	85 Min.*	dBA
Frequency	3.5 +/- 0.5	KHz.
Operating Temp.	-20 to +60	°C
Storage Temp.	-30 to +70	°C

* Rated applying 12VDC @ 30cm.

Distributed by Electro-Stock, Inc.
sales@electrostock.com
630-682-1542
Fax 630-682-1562
http://www.electrostock.com

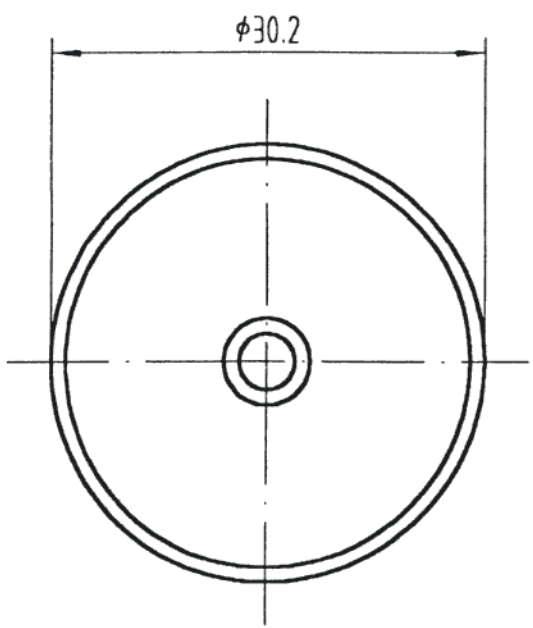

TRIP-3035P Piezo Audio Indicator

SCALE: Not to Scale	APPROVED BY:	DRAWN BY EDP
DATE: 3/99		REVISED
Transducers-USA Elk Grove Village, IL. USA		
		DRAWING NUMBER